Berkeley Dimensions

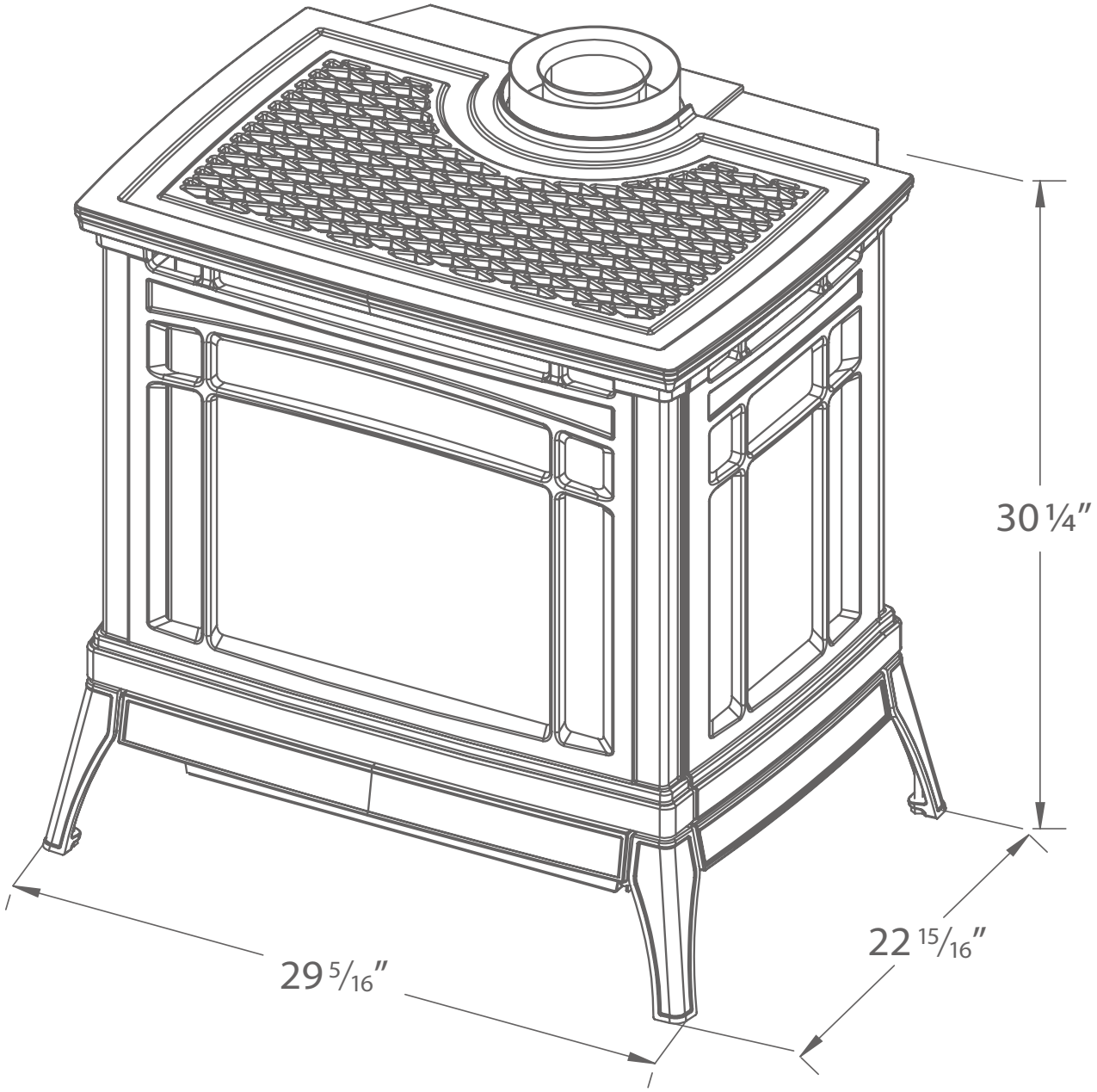

Clearance to Combustables

Min. distance to the sides of the unit	12"
Min. distance to non-combustible surface behind	5"
Min. distance to non-combustible surface above	27½"

Please see owner's manual for more information

Issued 05/13/16

Measurements are approximate please consult owners manual for details.